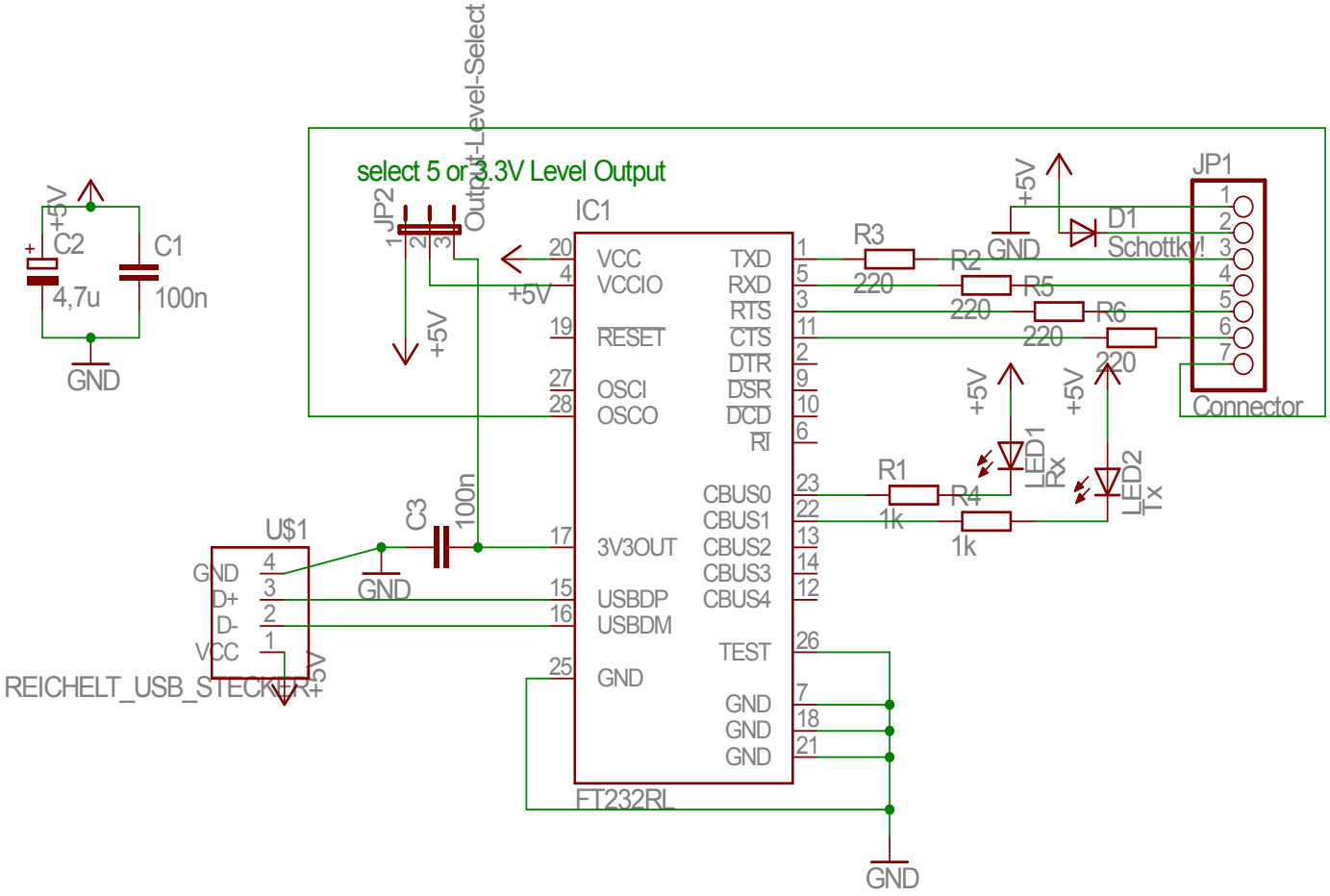
select 5 or 3.3V Level Output
Output-Level-Select
JP2
IC1
VCC
VCCIO
RESET
OSCI
OSCO
3V3OUT
USBDP
USBDM
GND
TXD
RXD
RTS
CTS
DTR
DSR
DCD
RI
CBUS0
CBUS1
CBUS2
CBUS3
CBUS4
TEST
FT232RL
+5V
C2
4,7u
C1
100n
GND
C3
100n
U$1
GND
D+
D-
VCC
REICHELT_USB_STECKER+
R3
220
R2
220
R5
220
R6
220
R1
1k
R4
1k
D1
Schottky!
JP1
Connector
LED1
Rx
LED2
Tx

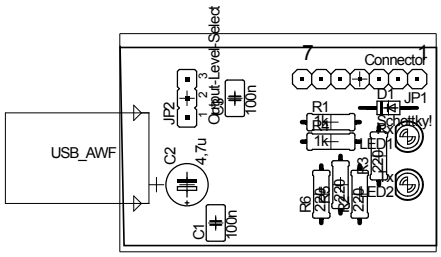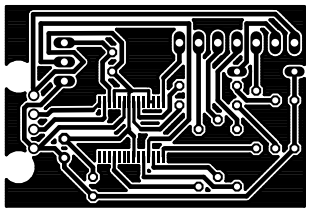
USB_AWF
Output-Level-Select
Connector
JP2
C2
4,7u
C1
100n
R1
1k
R4
1k
D1
JP1
Schottky!
LED1
LED2
R6
220
R3
220